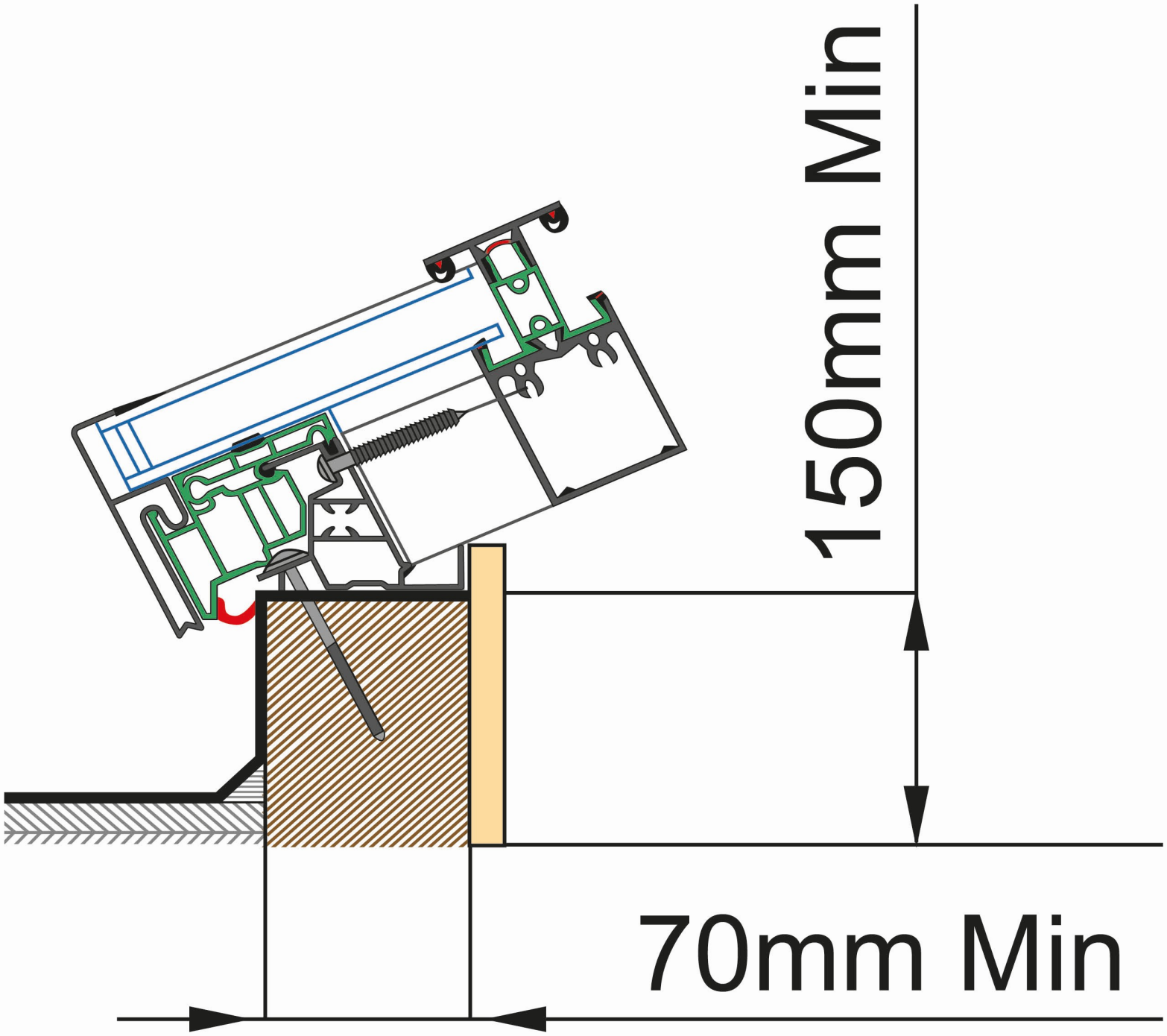

All measurements are EXTERNAL kerb/upstand